TYPE: THREE PHASE, ONAN PADMOUNT
KVA: 5000
HIGH VOLTAGE: 66000 V DELTA x 33000 V DELTA
HV BIL: 350 KV x 170KV
HV TAPS: 4 @ 2 1/2% - 1 FCAN, 3 FCBN
LOW VOLTAGE: 24940GrdY/14400 V
LV BIL: 125 KV
LV NEUTRAL BIL: 95 kV
WINDING TEMP. RISE: 65°C
FREQUENCY: 60 HZ.

TOTAL CALCULATED MASS IN KG'S:
CORE & COILS = 8425
TANK,KIOSK & FITTINGS = 5650
OIL - (7200 L) = 6400
TOTAL MASS = 20475

NOTES:
1. Paint finish - seafoam green
2. Front view shown with HV doors closed
3. Removable lower HV & LV enclosure sills
4. Instruments are enclosed in padlocable cabinet with pentahead bolts
5. Units are built to customer spec.
6. Transformer air space filled with dry nitrogen
7. "Keep Away" warning decals on inside of compartment doors.

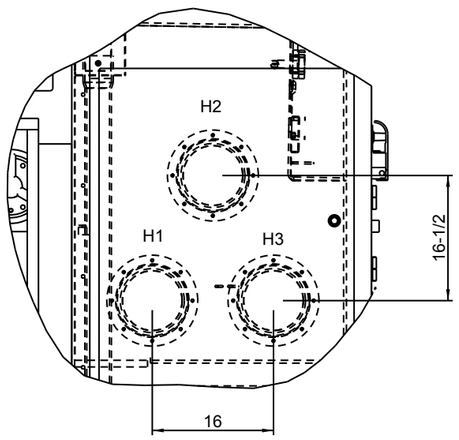


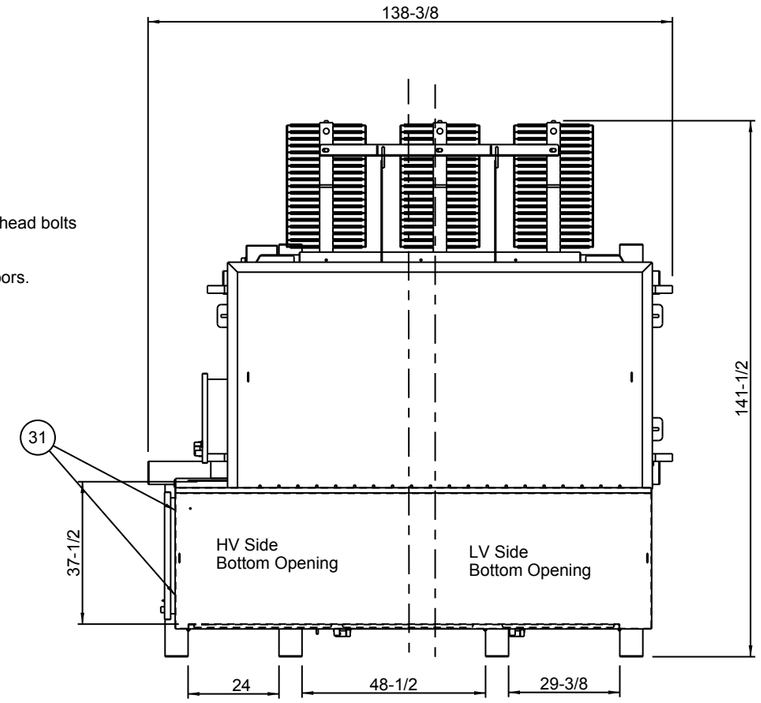


| | |
|---|---|
| 1 | Bolted cooling radiators c/w tamperproof flange |
| 2 | Bolted tank cover c/w tamperproof flange |
| 3 | Integral tank and bolted enclosure |
| 4 | Recessed HV enclosure doors c/w grounding, 90° and 110° hold open device, 3 point locking, handle with provision for padlocking, two pentahead bolts |
| 5 | Transformer lifting lugs |
| 6 | LV cable box c/w grounding, 90° and 110° hold open device, 3 point locking, handle with provision for padlocking and two pentahead bolts |
| 7 | Top filter press connecton - 1" IPS ball valve c/w brass plug |
| 8 | Nameplate and connection diagram |
| 9 | Pressure relief device, operates @ 70 KPA, oil flow directed to ground |
| 10 | Oil level gauge |
| 11 | Oil temperature indicator |
| 12 | 72 kV Class Deadfront PFISTERER-827682A Plug -in Bushings c/w Separable Connector (Cable and Cable terminations at site by others) |
| 13 | LV ANSI/IEEE 386 Universal Deadbreak Apparatus Bushings, rated 25 kV and 600A |
| 14 | Parking stands no. 160 PS to CSA STD C227.4 - M1978 |
| 15 | Ground spades c/w ground bar and stirrup ass'y, LV compartment |
| 16 | Pressure vacuum gauge (±100 KPA) c/w Schrader Valve Assembly |
| 17 | Drain - 1" IPS bronze globe valve c/w brass plug and 3/8" sample valve |
| 18 | External self-adhesive identification nameplate |
| 19 | External self-adhesive non-PCB decal |
| 20 | EEMAC L1603 warning signs - external self-adhesive (four supplied by PTI) |
| 21 | Externally operated padlockable tapswitch handle c/w warning and TC decal and enclosed in a padlockable cabinet with pentahead bolts |
| 22 | Skid base c/w 2 1/2 towing holes |
| 23 | PTI Decal |
| 24 | Transformer jacking steps 12" to underside 6" x 6" jack pad |
| 25 | External core ground bushing c/w 25 W, 250 Ohm resistor |
| 26 | Instruction manual pouch |
| 27 | LVN Bushing PTI 95 BIL, 200 Amp, porcelain type with two hole spade terminal which is grounded to the ground bus with 2/0 insulated cable |
| 28 | Vacuum Connection - 2" IPS bronze globe valve c/w brass plug |
| 29 | HV Cable Supports |
| 30 | Ground spades c/w ground bar, stirrup and ground ball, HV compartment |
| 31 | Provision for winch mounting |
| 32 | HV Series Parallel Switch |
| | |

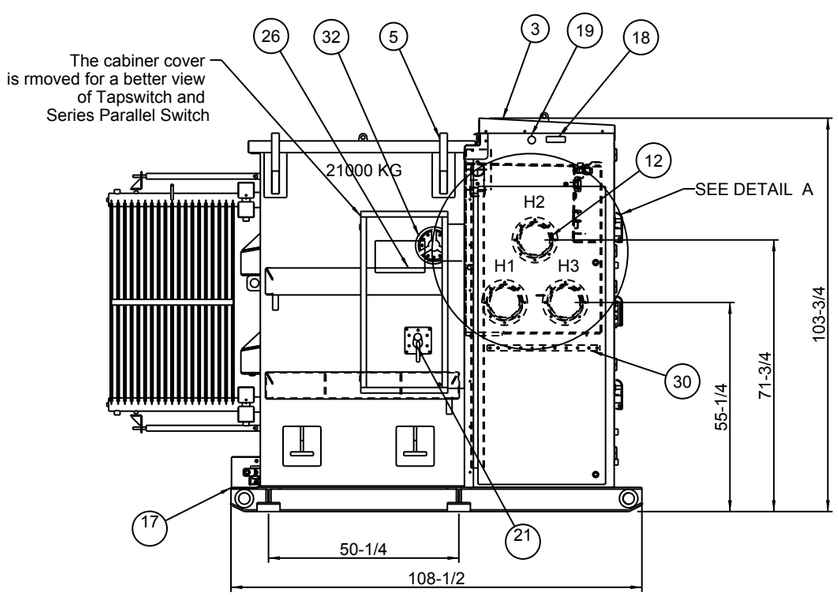


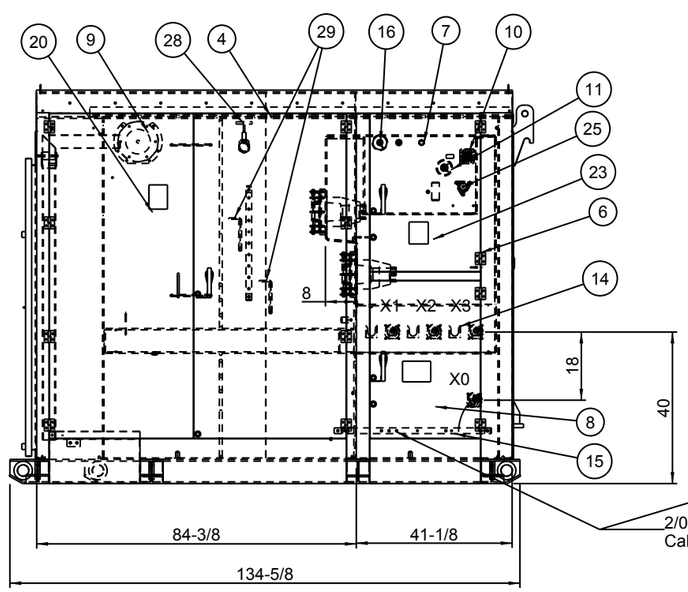


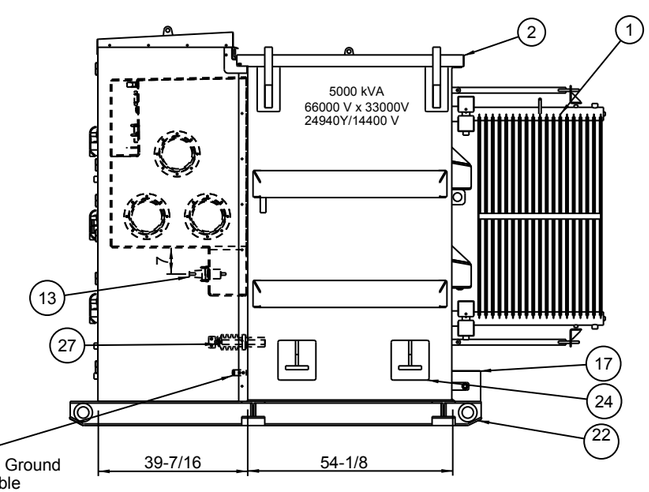


Tolerences are not cumulative.
Dimensions are in inches unless otherwise stated.

PARTNER TECHNOLOGIES INCORPORATED

| | | | | | | | | | |
|---|---|---|---|---|---|---|---|---|---|
| DATE - | REV | DATE | BY | DESCRIPTION | TAG No.: - | CUSTOMER: | PTI QUOTE No. Q12772-1 | TITLE OUTLINE | |
| DRAWN BY S.Golubovic | 1 | | | | PTI SO No. N10225 | CUSTOMER PO No. | SCALE 0.025 | | |
| APP BY | 2 | | | | DOCUMENT CODE: - | ULTIMATE LOCATION: - | SHEET 1/1 | DWG NO 01-10225 | REV |